CATALOG OF REPLACEMENT PARTS



OV500E1 ELECTRIC RACK OVEN

ML-132585	OV500E1
ML-132646	OV500E1

A product of BAXTER MFG. CO., INC. 19220 STATE ROUTE 162 EAST, ORTING, WA 98360

FORM 43403 Rev. B (February 2026)

 © BAXTER MFG. 2026

Table of Contents

5 COMPONENT BOX
7 CONTROL CABINET, DOOR, AND CONTROLLER
9 CABINET
11 HOOD
13 LOADING DOOR
15 BLOWER, PANELS, AND VENTS
17 CEILING AND SHUTTERS
19 LIFTER
21 ROTATOR
23 CARRIER
25 STEAMER ASSEMBLY
27 EXTERIOR WATER SUPPLY
29 HEATING ELEMENTS

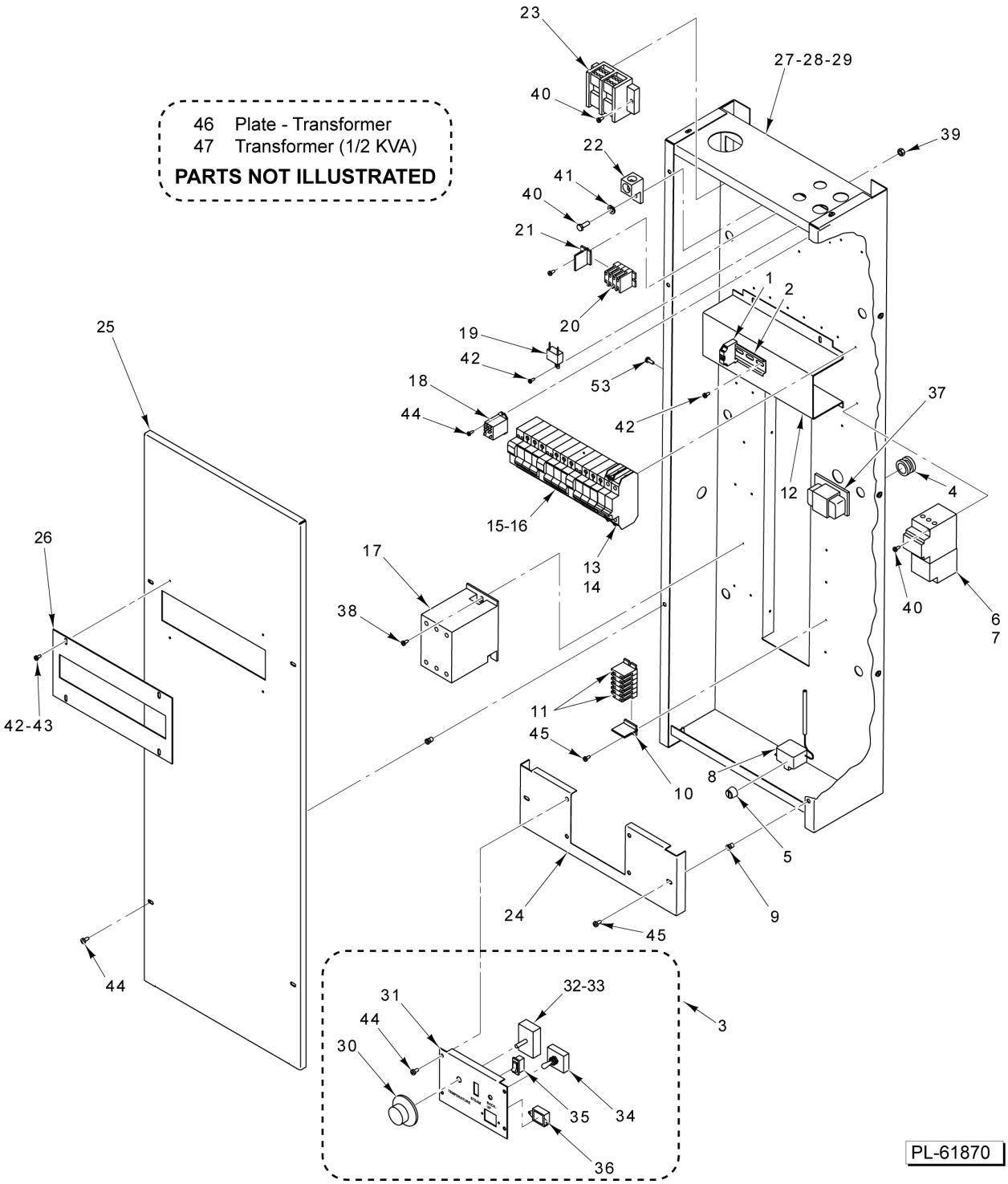

COMPONENT BOX

COMPONENT BOX

ILLUS. PL-61870	PART NO.	NAME OF PART	AMT.
1	01-1000V6-00252	End Stop - Din Rail	AR
2	01-100V18-00115	Din Rail 9080-M H	AR
3	01-1M5083-00001	Back-Up Control Unit (Incls. Items 30 thru 36)	1
4	01-1000V5-00059	Bushing - Snap 7/8 In. (Plastic)	1
5	01-1000V6-00407	High Limit Cap	1
6	01-1M7548-00002	Contactor - Overload Assy. (4-6 Amp.) (208-240 V.) (3 Ph.)	1
7	01-1M7549-00002	Contactor - Overload Assy. (1.6 - 2.5 Amp.) (380-415/440-480 V.) (3 Ph.)	1
8	01-1M6165-00001	Kit, High Limit (608 Deg. F/320 Deg. C) - Manual Reset	1
9	01-1000V4-00121	Insert - Threaded 10-32 Hex	AR
10	01-1000V5-00106	Strip End - Terminal	AR
11	01-1000V5-00105	Strip - Terminal	AR
12	01-1M5418-00008	Bracket - Circuit Breaker	1
13	01-1000V6-00423	Circuit Breaker (10A) (1 Ph.)	2
14	01-1000V6-00424	Circuit Breaker (13A) (1 Ph.)	1
15	01-1M7547-00001	Kit - Breaker Replacement (32/35 Amp.) (380-415/440-480 V.) (With 120 V. UV Breaker) (Single)	2
16	01-1M7546-00001	Kit - Breaker Replacement (63 Amp.) (208-240 V.) (With 120 V. UV Breaker) (Single)	2
17	01-1000V6-00348	Contactor (3-Pole) (50 Amp.) (Single)	2
18	01-1000V6-00271	Relay - D.P.D.T. (1/2 Hp., 120 VAC)	1
19	01-100V10-00242	Filter - EMI	1
20	01-1000V5-00105	Strip - Terminal	6
21	01-1000V5-00106	Strip End - Terminal	1
22	01-1000V5-00037	Lug - Terminal	1
23	01-1000V5-00096	Block - Power Distribution	1
24	01-1M5418-00004	Cover - Bottom Electric Box	1
25	01-1M5418-00006	Electric Box Cover Assy. (Incls. Item 26)	1
26	01-1M5418-00007	Cover - Circuit Breaker	1
27	01-1M5828-0005F	Module - Electric (208-240 V./60/3) (Incls. items 1 thru 6, 8 thru 15, 17 thru 25, & 37)	1
28	01-1M5828-0006F	Module - Electric (440-480 V./60/3) (Incls. items 1 thru 5, 7 thru 14, 16 thru 25, & 37)	1
29	01-1M5828-0007F	Module - Electric (380 V.) (Incls. items 1 thru 5, 7 thru 14, 16 thru 25, & 37)	1
30	01-100V18-00149	Knob - Thermostat	1
31	01-1M5084-00001	Plate - Back-Up Control ID	1
32	01-1000V6-00450	Thermostat W/ Compression Fitting (Back-Up Controls)	1
33	01-1M5894-00001	Bracket - Back-Up	1
34	01-1000V6-00220	Switch - Toggle 4 PDT	1
35	01-1000V6-00221	Switch - MOM Transfer	1
36	01-1000V6-00271	Relay - D.P.D.T. (1/2 Hp., 120 VAC)	1
37	01-100V10-00278	Transformer (5 VA) (120-24 V.)	1
38	01-1000V4-00630	Screw Pan Hd. Phil. #8-32 x 3/4	AR
39	01-1000V4-00330	Nut, Hex 1/4-20 (Zinc)	AR
40	01-1000V4-00417	Mach. Screw Hex Hd. 1/4-20 x 3/4 In	AR
41	01-1000V4-00470	Lockwasher 1/4 In. (SST) (1/4 In.) (SST)	AR
42	01-1000V4-00631	Screw Pan. Hd. #8-32 x 3/8	AR
43	01-10004V-00434	Washer - Flat #10 (SST)	4
44	01-1000V4-00474	Screw 10-32 x 1/2 Hex Washer Hd. (Zinc) (SST)	AR
45	01-1000V4-00429	Screw Pan Hd. Phil. #10-32 x 1/2	AR
46	01-1M2734-00001	Plate - Transformer	1
47	01-100V10-00120	Transformer (1/2 KVA) (Export) (Located On Lift / Rack Assy.)	1

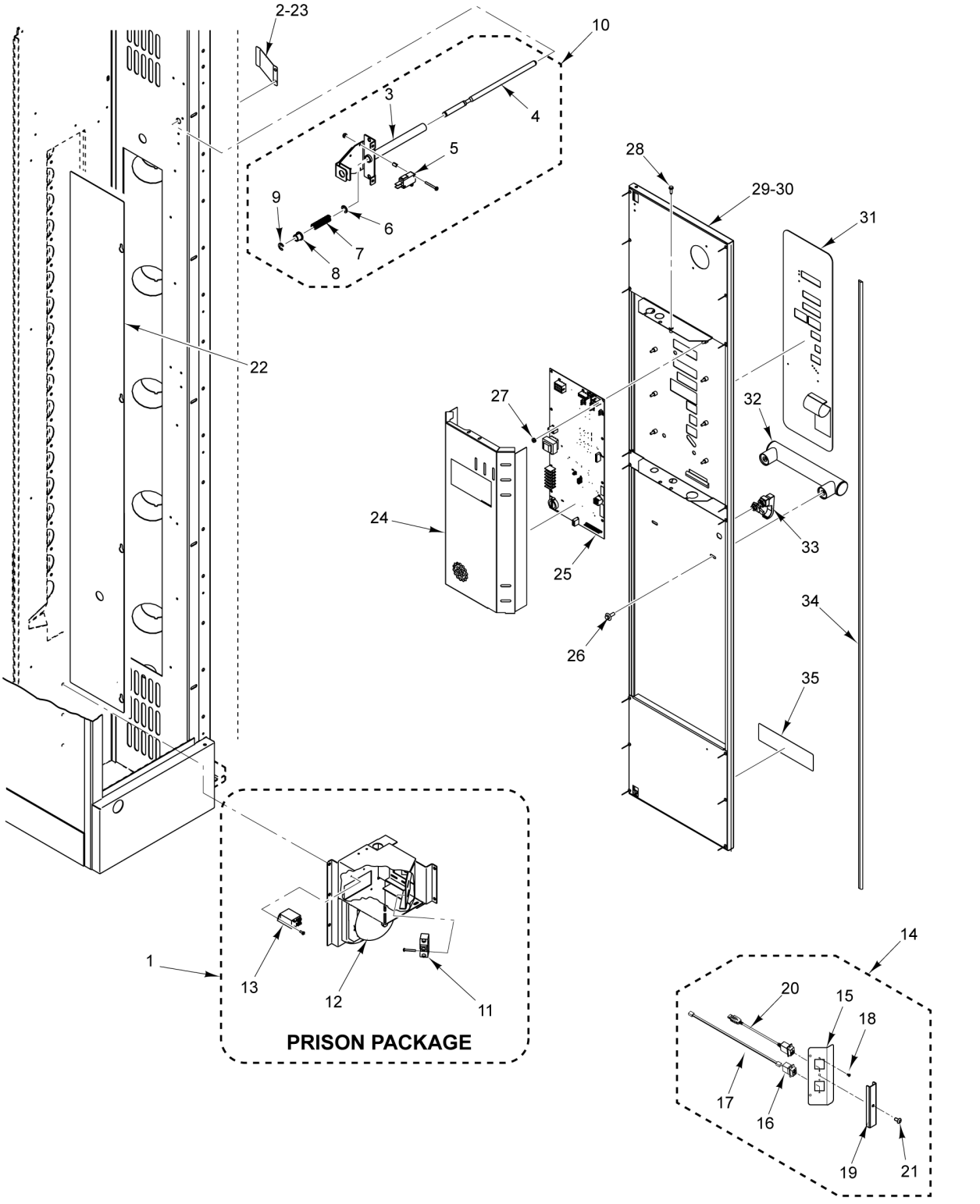

CONTROL CABINET, DOOR, AND CONTROLLER

CONTROL CABINET, DOOR, AND CONTROLLER

ILLUS. PL-61871	PART NO.	NAME OF PART	AMT.
1	01-1M5640-00001	Stop Assy. - Emergency (Incls. Items 11 thru 13)	1
2	01-1M6928-00001	Plate, Actuator (Door Switch)	1
3	01-1M6478-00001	Door Switch Assy. (Spring Loaded)	1
4	01-1M6478-00101	Rod - Actuator	1
5	01-1000V6-00343	Switch - Lever SPST	2
6	01-1000V1-00078	Clip - E-Door	1
7	01-100V20-00027	Spring - Compression	1
8	01-1M6478-00103	Bearing (Bronze)	1
9	01-1000V1-00078	Clip - E-Door	1
10	01-1M6478-00001	Door Switch Assy. (Spring Loaded)	1
11	01-1000V4-00283	Mach. Screw 1/4-20 x 3/4 Hex Washer Hd. (SST)	AR
12	01-1000V6-00255	Switch - Emergency Stop (Prison Package)	1
13	01-100V10-0003B	Bell (Includes Gong & Body) (Prison Package)	1
14	01-1M7258-00002	Communications Port Assy	AR
15	01-1M6216-00001	Kit - Advanced Control Box	1
16	01-100V10-00343	USB - Panel Mount (12" Cable)	1
17	01-100V10-00344	Jack - RJ12 Panel Mount Coupler	1
18	01-100V10-00348	Cable - RJ12 Telephone (12")	1
19	01-100V12-00037	Rivet - Push/Lock (Black Plastic)	4
20	01-1M7258-00101	Bracket - Comm. Port	1
21	01-1M7258-00201	Cover - USB (Rack Oven)	1
22	01-1M5150-00001	Cover - Light Access	1
23	01-1000V4-00284	Screw 10-32 x 3/4 Hex Washer Hd., Serrated Flange (SST)	1
24	01-1M7063-00102	Cover, Control - Display	1
25	01-100V16-01036	Board - Control (USB Compatible)	1
26	01-1000V4-00283	Mach. Screw 1/4-20 x 3/4 Hex Washer Hd. (SST)	2
27	01-1000V4-00336	Nut #10-32 W/ Lockwasher (SST)	8
28	01-1000V4-00400	Cap Screw 10-32 x 3/4 Hex Hd. (SST)	4
29	01-1M7552-00001	Control Door Assy.	1
30	01-1M7552-00002	Control Door Assy. (Security)	1
31	01-100V16-00866	Label - Advanced Controls	1
32	01-1M6376-00005	Handle - Door	1
33	01-100V18-00161	Latch	1
34	01-100V21-00092	Gasket - PVC-Extruded ("B" Shape)	1
35	01-100V16-0290F	Label	1

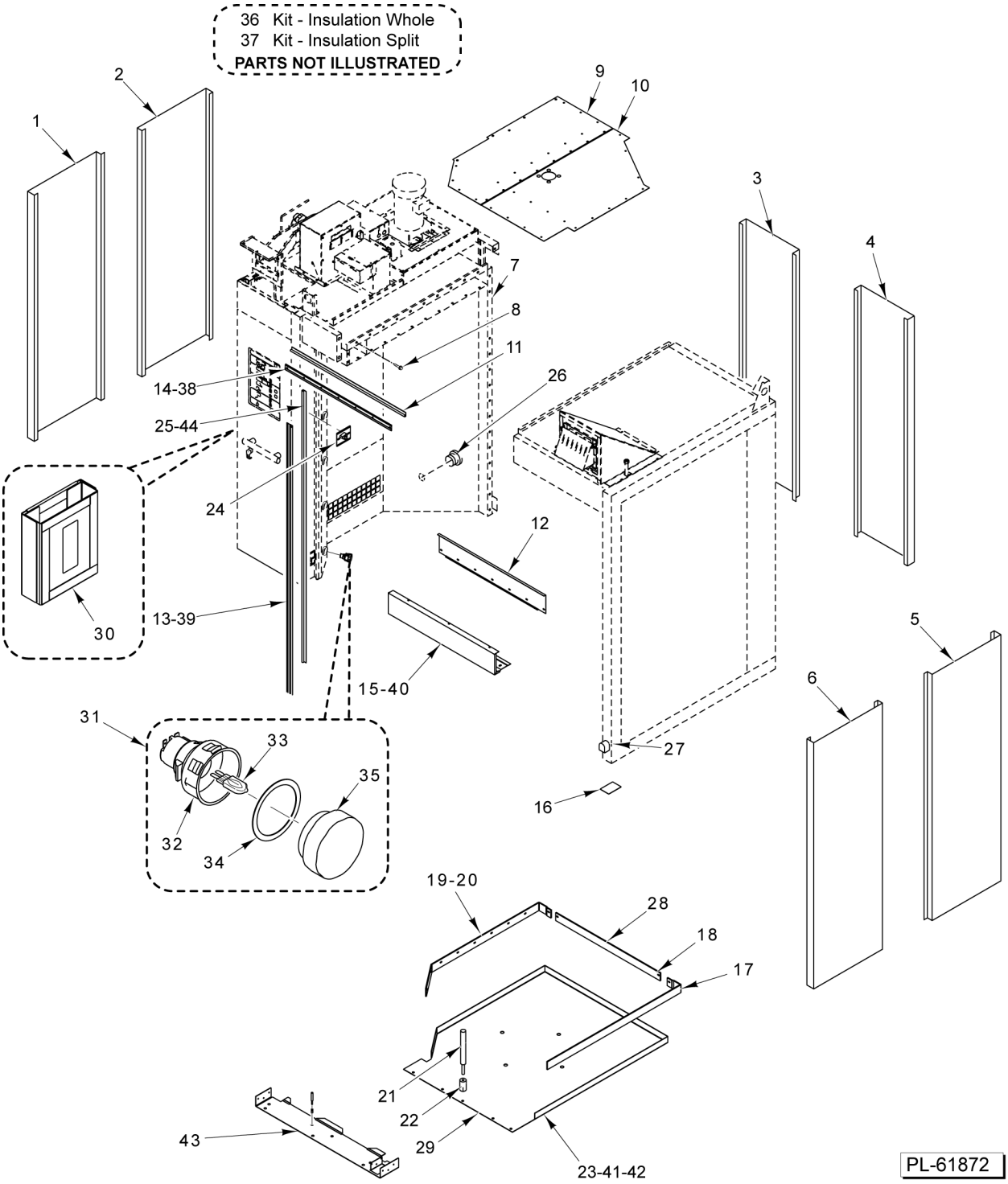
36 Kit - Insulation Whole
37 Kit - Insulation Split
PARTS NOT ILLUSTRATED
1
2
3
4
5
6
7
8
9
10
11
12
13-39
14-38
15-40
16
17
18
19-20
21
22
23-41-42
24
25-44
26
27
28
29
30
31
32
33
34
35
43
PL-61872

CABINET

CABINET

ILLUS. PL-61872	PART NO.	NAME OF PART	AMT.
1	01-1M5672-00002	Skin - Outer	1
2	01-1M5672-00001	Skin - Outer	1
3	01-1M5672-00002	Skin - Outer	1
4	01-1M5672-00001	Skin - Outer	1
5	01-1M5672-00002	Skin - Outer	1
6	01-1M5672-00001	Skin - Outer	1
*7	01-100V21-0065A	Tape - Fiberglass (1/8 x 1) (With Adhesive)	AR
8	01-1000V4-00283	Mach. Screw 1/4-20 x 3/4 Hex Washer Hd. (SST)	AR
9	01-1M5460-00001	Panel - False Ceiling (LH)	1
10	01-1M5460-00002	Panel - False Ceiling (RH)	1
11	01-100V16-0789C	Gasket - Loading Door (Horizontal)	1
12	01-1M6119-00103	Cover - Bottom Header (ML-132585)	1
13	01-1M6159-00101	Retainer - Gasket Loading Door (Vertical) (ML-132585)	2
14	01-1M6159-00103	Retainer - Gasket Horizontal (ML-132585)	1
15	01-1M6119-00101	Header - Top Door Loading (ML-132585)	1
16	01-1M5610-00201	Shim	1
17	01-1M7105-00101	Trim - Floor (Right) (Fiberglass Tape Not Included, Order Item 28)	1
18	01-1M7105-00102	Trim - Floor (Rear) (Fiberglass Tape Not Included, Order Item 28)	1
19	01-1M7105-00103	Trim - Floor (Left) (Fiberglass Tape Not Included, Order Item 28)	1
20	01-1000V4-00283	Mach. Screw 1/4-20 x 3/4 Hex Washer Hd. (SST)	AR
21	01-1000V4-0073A	Tool - Setting (1/4 In.)	1
22	01-1000V4-00073	Anchor - Drop-In 1/4-20	1
23	01-1M7230-00001	Floor - Single (One Piece) (ML-132585)	1
24	01-1M6116-00002	Ramp Lock - Weldment	2
25	01-100V16-0789A	Gasket - Loading Door (Vertical) (ML-132585)	2
26	01-100V17-00233	Pipe 6-1/2 x 1/2 (Non-Rear Drain)	1
27	01-1M2335-00001	Wheel (For Installation)	1
*28	01-100V21-0065A	Tape - Fiberglass (1/8 x 1) (Use With Items 17 thru 19)	AR
29	01-1M7105-00001	Kit - Floor Trim (Single) (Incls. Items 17, 18, 19, & 28)	1
30	01-1P2429-00003	Kit - Thermometer Holder	AR
31	01-1M7311-00001	Kit - Light Replacement (Incls. Items 32 thru 35)	AR
32	01-1000V7-00057	Base - Halogen Oven Lamp	AR
33	01-1000V7-00054	Bulb - Halogen G9 Base	AR
34	01-1000V7-00059	Ring - Pressure	AR
35	01-1000V7-00058	Lens - Oven Lamp	AR
36	01-1M7339-00001	Kit - Insulation (Whole)	1
37	01-1M7340-00001	Kit - Insulation, Oven (Split)	1
38	01-1M7090-00101	Retainer - Gasket (Horizontal) (ML-132645)	1
39	01-1M7090-00202	Retainer - Gasket (ML-132645)	2
40	01-1M7031-00101	Cover - Header (One Piece Header Cover) (ML-132645)	1
41	01-1M7101-00101	Floor - Skin (RH) (ML-132645)	1
42	01-1M7102-00101	Floor - Skin (LH) (ML-132645)	1
43	01-1M7047-00101	Plate - Threshold (ML-132645)	1
44	01-100V16-0789E	Gasket - Loading Door (Vertical) (ML-132645)	2

* (Sold Per Inch)

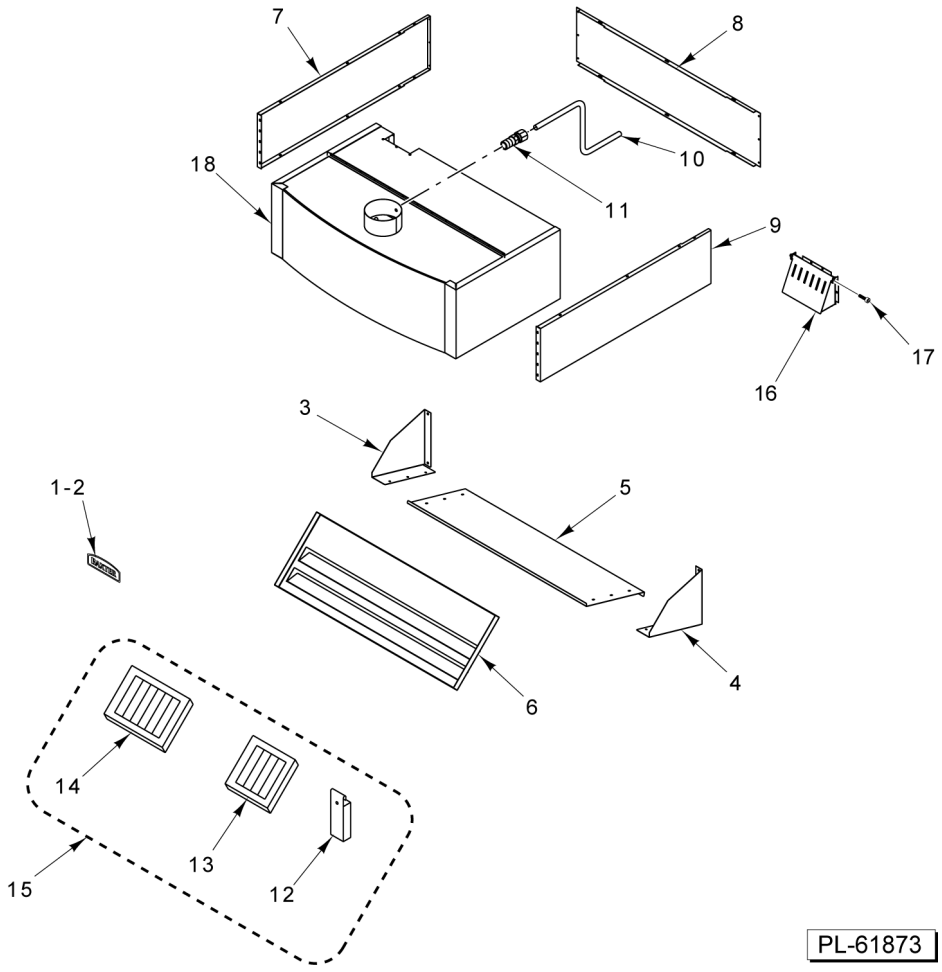

HOOD

HOOD

ILLUS. PL-61873	PART NO.	NAME OF PART	AMT.
1	01-100V16-0772B	Nameplate - Baxter Curved (9 In.)	1
2	01-100V16-0772A	Nameplate - Baxter Flat (9 In.)	1
3	01-1M7125-00001	Bracket - Plenum (Left)	1
4	01-1M7125-00002	Bracket - Plenum (Right)	1
5	01-1M7124-00001	Plenum - Hood	1
6	01-1M7123-00001	Baffle - Hood	1
7	01-1M6115-00101	Trim - Hood Side Single	1
8	01-1M5352-00001	Trim - Rear	1
9	01-1M6115-00101	Trim - Hood Side Single	1
10	01-100V17-00004	Tube 1/4 O.D. x 100 In. Lg. (Alum.)	1
11	FP-078-49	Fitting - Tube (1/4 In.) (Brass)	1
12	01-1M3032-00001	Cup - Hood Grease	1
13	01-100V18-00089	Filter - Hood 16 x 20 W/Drop (Type I Hood)	1
14	01-100V18-00088	Filter - Hood 16 x 16 W/Drop (Type I Hood)	2
15	01-1M5931-00001	Kit - Grease Filter (Single) (Incls. Items 12, 13, & 14)	1
16	01-1M5624-00001	Over Pressure Vent Assy. (Incls. Item 17)	1
17	01-1000V4-00572	Shoulder Screw, #10-32 X 3/8 Thread Length, .25 DIA X 3/8 Shoulder Length	2
18	01-1M7121-00003	Kit - Hood (Curved Front) (30 In.) (Standard Ovens) (Incls. Items 1, & 3 thru 9)	1

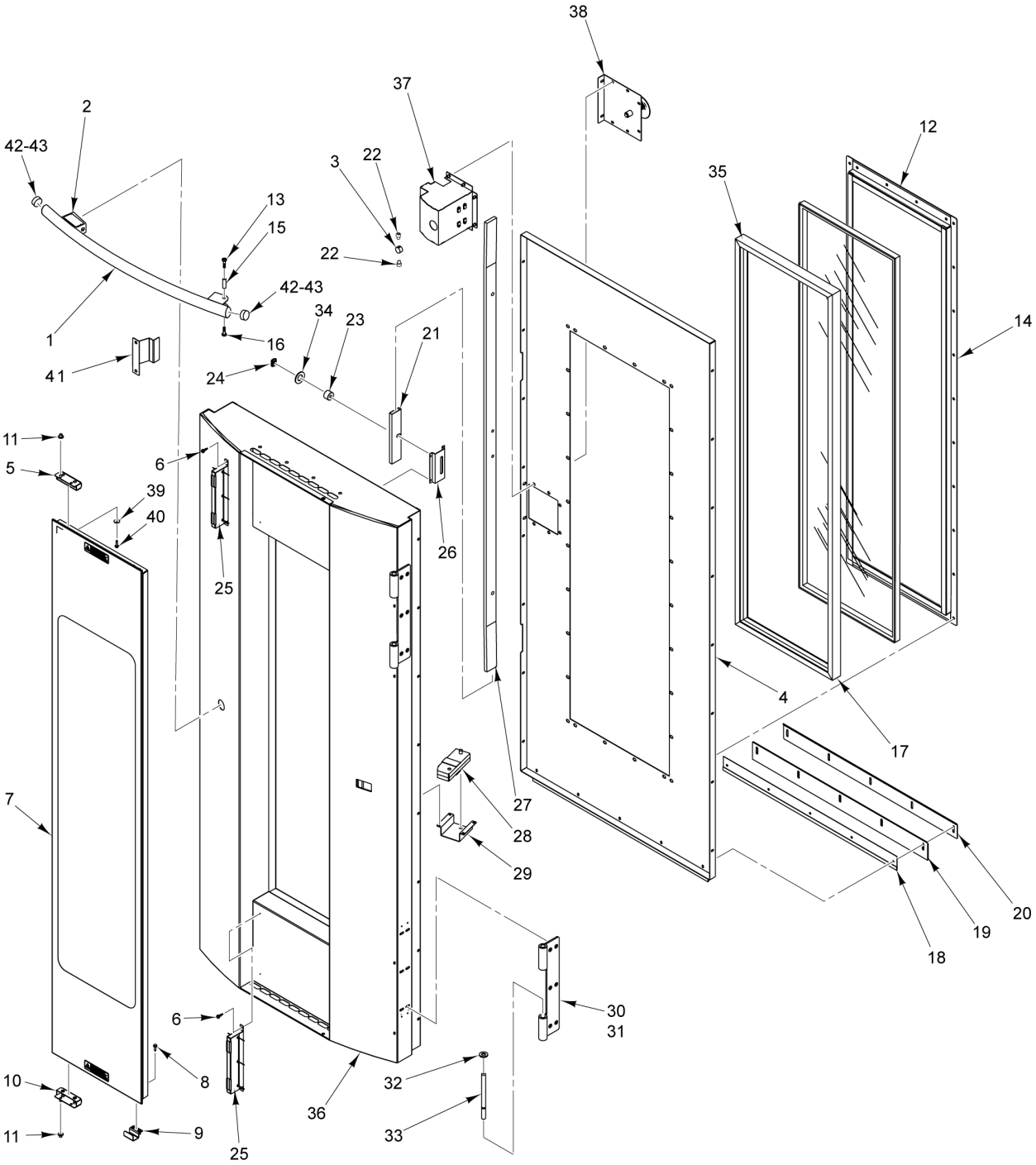

PL-61874

LOADING DOOR

LOADING DOOR

ILLUS. PL-61874	PART NO.	NAME OF PART	AMT.
1	01-1M6376-00001	Handle - Loading Door	1
2	01-100V16-00259	Label - Warning	2
3	01-1M6101-00102	Plug - Handle Mount	1
4	01-1M6101-00101	Skin - Inner Door	1
5	01-1M6110-00005	Bracket	1
6	01-1000V4-00426	Screw #10-16 x 3/4 Hex Hd. (Drill Tip) (SST) (Hot)	4
7	01-1M6946-00001	Kit - Outer Door Glass Assy. (Incls. Items 6 thru 11, 25, 39, & 40)	1
8	01-1000V4-00400	Cap Screw 10-32 x 3/4 Hex Hd. (SST)	1
9	01-1M6110-00005	Bracket (Glass Handle)	1
10	01-1M6110-00002	Pivot - Bottom	1
11	01-1000V0-00095	Bearing - Glass Pivot Sleeve	1
12	01-1M6106-00002	Retainer - Window Horizontal	2
13		Mach. Screw 1/4-20 Phillips Flt. Hd	1
14	01-1M6105-00001	Retainer - Window Vertical	2
15	01-1M6101-00115	Pin - Handle Hinge (Curved)	1
16		Mach. Screw 1/4-20 Phillips Flt. Hd	1
17	01-100V16-00766	Gasket - Window (One-Piece Fused Corners)	1
18	01-1M6101-00112	Sweep - Inner Door	1
19	01-100V16-0779A	Gasket - Door Sweep	1
20	01-1M6101-00113	Sweep - Outer Door	1
21	01-1M6101-00210	Bearing - Lock Bar	2
22	01-1000V4-00369	Cap Screw 1/4 x 1/4 Hex Socket Hd. (Zinc-Plated)	AR
23	01-1000V0-00109	Bearing - Door Latch Roller	2
24	01-1000V1-00078	Clip - E-Door	2
25	01-1M6149-00002	Magnet - Outer Door Weldment (Double)	2
26	01-1M6101-00109	Lock - Retainer Bar	2
27	01-1M7099-00001	Bar - Lock	2
28	01-1M6166-00001	Bracket - Handle Pivot	1
29	01-1M6166-00002	Support - Handle Pivot	1
30	01-1M5918-00003	Hinge Assy. - Jamb Hinge (Incls. Item 31, 32, & 33)	2
31	01-1M5918-00301	Hinge - Door (Female)	2
32	01-1000V0-00080	Bearing - Door Hinge (Brass)	4
33	01-1M5918-00201	Pin - Hinge Loading Door	4
34	01-1000V4-00376	Washer	AR
35	01-100V21-0065A	Tape - Fiberglass (1/8 x 1)	AR
36	01-1M6199-00001	Door Assy. (Incls. Items 1 thru 35)	1
37	01-1M6108-00001	Latch Assy. (Mechanism)	1
38	01-1M7343-00001	Handle - Interior Door	1
39	01-1000V0-00434	Washer	2
40	01-1000V0-00284	Screw	AR
41	01-1M6526-00001	Bracket - Actuator, Door Switch	1
42	00-913135-00228	Plug - Snap In (Round)	2
43	01-1M6103-0203B	Cap - End (Door Handle) (Oval)	2

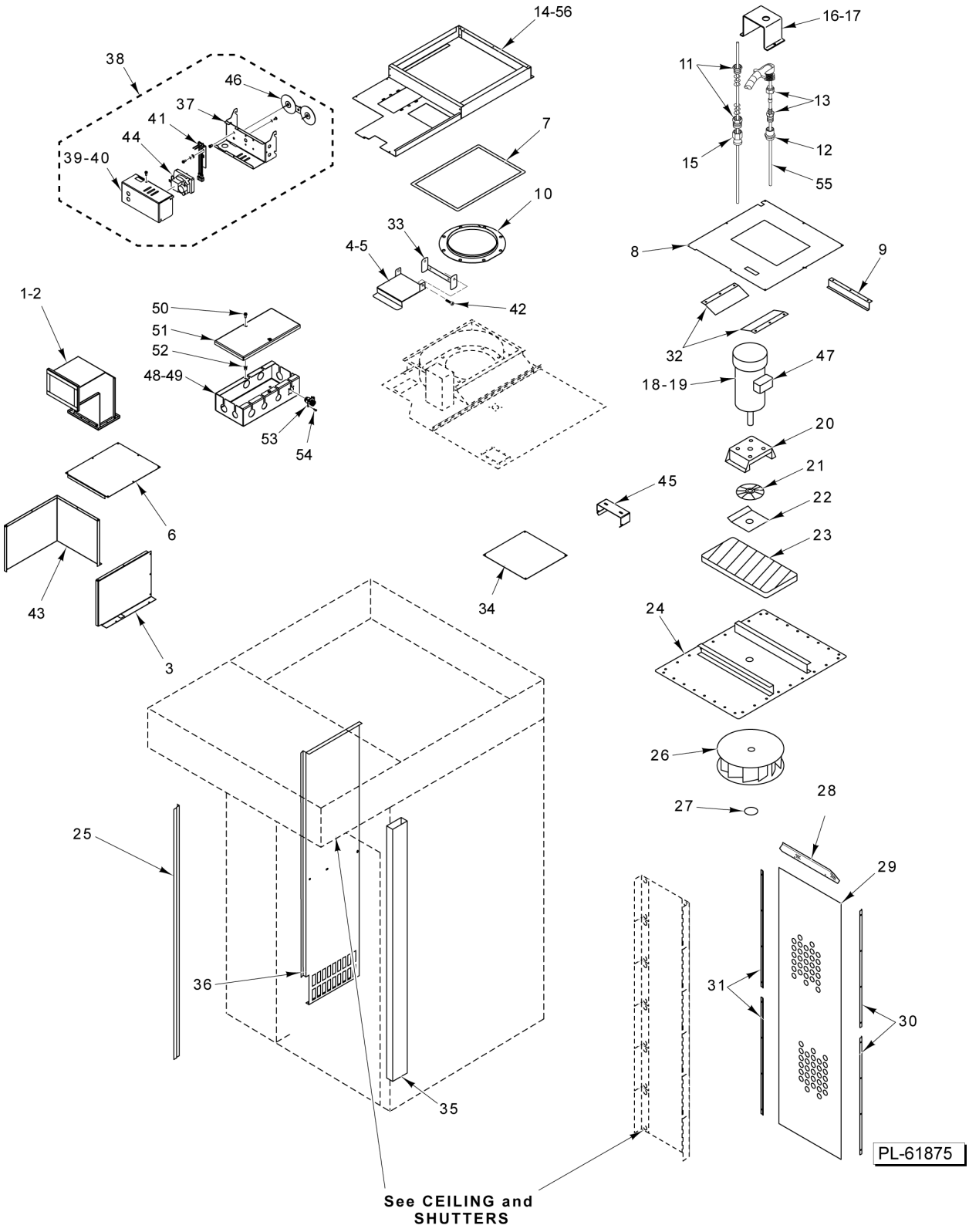

BLOWER, PANELS, AND VENTS

BLOWER, PANELS, AND VENTS

ILLUS. PL-61875	PART NO.	NAME OF PART	AMT.
1	01-1M6170-00001	Duct - Vent	1
2	01-100V16-00682	Gasket - Vent Duct	1
3	01-1M2222-00001	Duct - Side	1
4	01-1M6549-00001	Vent - Intake Lid	1
5	01-100V16-00682	Gasket - Vent Duct	1
6	01-1M2224-00001	Duct - Top	1
*7	01-100V21-0065A	Tape - Fiberglass (1/8 x 1)	AR
8	01-1M5542-00001	Cover - Blower Insulation	1
9	01-1M2227-00001	Liner - Blower Insulation Cover	2
10	01-1M2451-00001	Bell - Inlet	1
11	01-100V17-00304	Kit - Stuffing Box	1
12	01-100V17-00257	Coupling 1/4 NPT (Brass)	1
13	01-100V17-00279	Fitting 1/4 x 3/16	1
14	01-1M6141-00001	Body - Insulation Blower Cover (LH) (ML-132585)	1
15	01-100V17-00281	Coupler - Reducer	1
16	01-1M1433-00001	Protector - Thermocouple	1
17	01-1M5515-00001	Thermocouple Assy. - Conduit & Thermocouple	1
18	01-1M2060-00002	Blower Assy. (3 Ph.) (Incls. Items 19 thru 24, 26, & 27)	1
19	01-1000V8-00052	Motor - Blower (3 Ph., 1-1/2 Hp.)	1
20	01-1M1360-00001	Mount - Blower Motor	1
21	01-1M2458-00001	Heat Slinger Assy	1
22	01-1M1794-00001	Cover - Blower Insulation	1
23	01-1M1795-00001	Insulation - Blower	1
24	01-1M2059-00001	Weldment - Blower Mount	1
25	01-1M5476-00001	Bracket - Mounting (Suction Panel)	1
26	01-1000V8-00041	Wheel - Blower (15 In. Dia.)	1
27	01-1000V1-00028	Ring - Snap	1
28	01-1M2101-00004	Z-Bar (Pressure Panel)	1
29	01-1M2572-00001	Screen - Pressure Panel	1
30	01-1M2479-00002	Retainer - Pressure Screen (RH)	2
31	01-1M2479-00003	Retainer - Pressure Screen (LH)	2
32	01-1M1895-00001	Cover - Blower Insulation	2
33	01-1M6550-00101	Bracket - Vent Lid	1
34	01-1M2466-00001	Cover - Outer Exhaust Hole	1
35	01-1M2089-00001	Duct - Bottom Vent	1
36	01-1M5473-00001	Panel - Suction	1
37	01-1M6551-00101	Bracket - Mounting (Vent)	1
38	01-1M6551-00001	Vent - Motor Actuator - Assy. (Incls. Items 37, 39 thru 41, 44, & 46)	1
39	01-1M6551-00102	Bracket - Vent Cover	1
40	01-1M7509-00001	Kit, Vent Motor Replacement	1
41	01-1M6552-00001	Vent Switch Assy. (Vertical Bolt Pattern)	1
42	01-1000V4-00572	Shoulder Screw, #10-32 X 3/8 Thread Length, .25 DIA X 3/8 Shoulder Length	2
43	01-1M2223-00001	Duct - Body	1
44	01-1000V8-00179	Motor - Vent Gear (4 RPM, 1/250 HP)	1
45	01-1M5600-00001	Bracket - Hi-Limit	1
46	01-1M6553-00001	Cam - Vent Switch	1
47	01-1M5607-00001	Harness - Conduit Blower	1
48	01-1M5525-00001	Box - Junction Assy. (Incls. Items 49 thru 54)	1
49	01-1M5525-00100	Box - Junction	1
50	01-1000V4-00474	Screw 10-32 x 1/2 Hex Washer Hd. (Zinc)	2
51	01-1M5525-00106	Cover - Junction Box	1
52	01-1000V4-00121	Insert - Threaded 10-32 Hex	2
53	01-1M7496-00001	Receptacle (Water Connection)	1
54	01-1000V4-00620	Mach. Screw 4-40 x 3/8	4
55	01-1A1828-00001	Kit - Thermocouple	1
56	01-1M7662-00001	Body - Blower Insulation Cover (LH) (ML-132645)	1

* (Sold Per Inch)

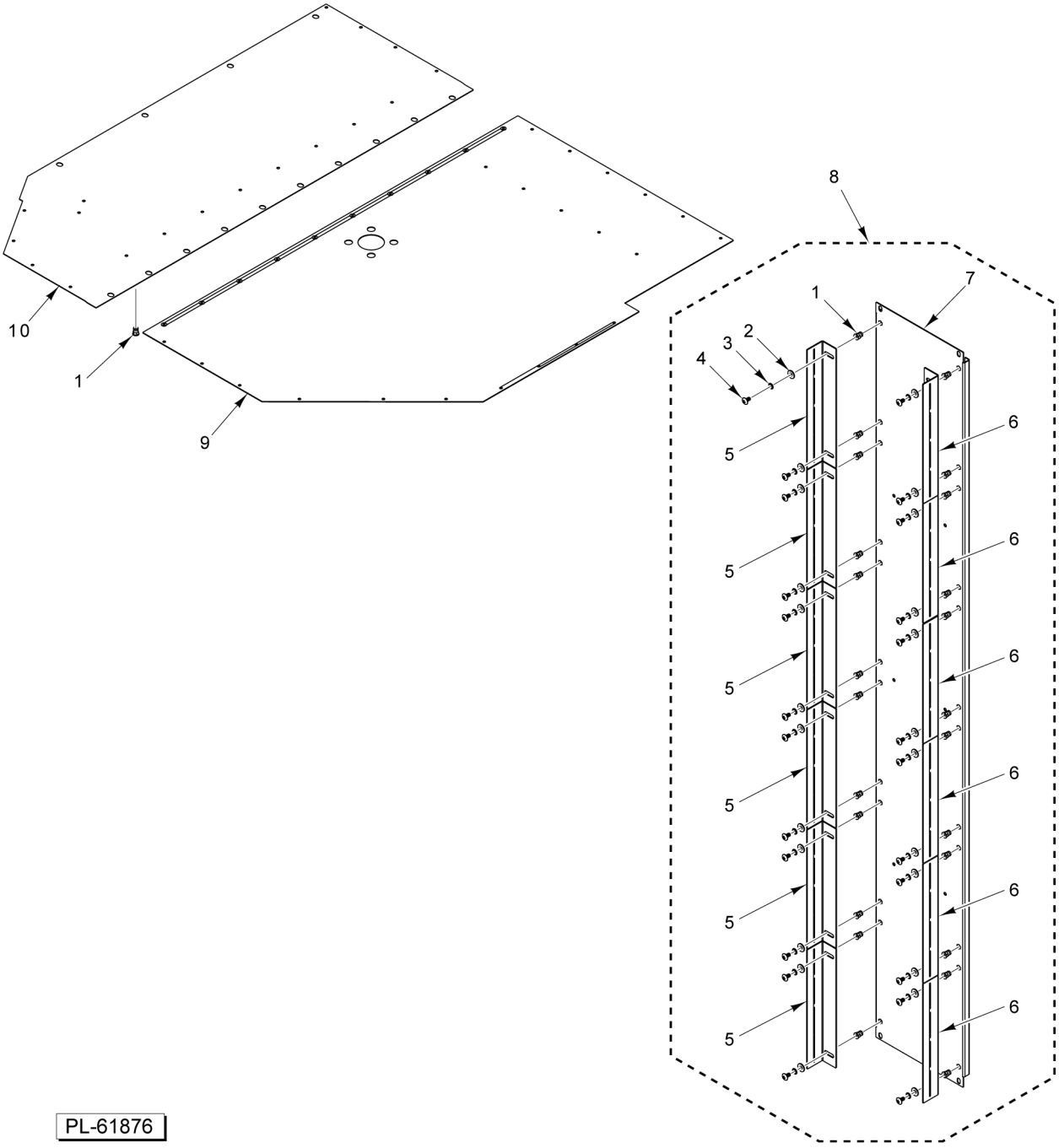

CEILING AND SHUTTERS

CEILING AND SHUTTERS

ILLUS. PL-61876	PART NO.	NAME OF PART	AMT.
1	01-1000V4-00122	Insert - Threaded 1/4-20	AR
2	01-1000V4-00433	Washer 1/4 In. (SST)	AR
3	01-1000V4-00470	Lockwasher 1/4 In. (SST)	AR
4	01-1000V4-00503	Mach. Screw 1/4-20 x 1/2 In. (SST)	AR
5	01-1M5459-00001	Shutter - Pressure Panel 90 Deg	6
6	01-1M5459-00002	Shutter - Pressure Panel 97 Deg	6
7	01-1M5523-00001	Body - Pressure Panel Shutter Support	1
8	01-1M5458-00001	Panel - Pressure Shutter Assy. (Incls. Items 1 thru 7)	1
9	01-1M7049-00004	Ceiling Assy. - False (RH)	1
10	01-1M7049-00002	Ceiling Assy. - False (LH)	1

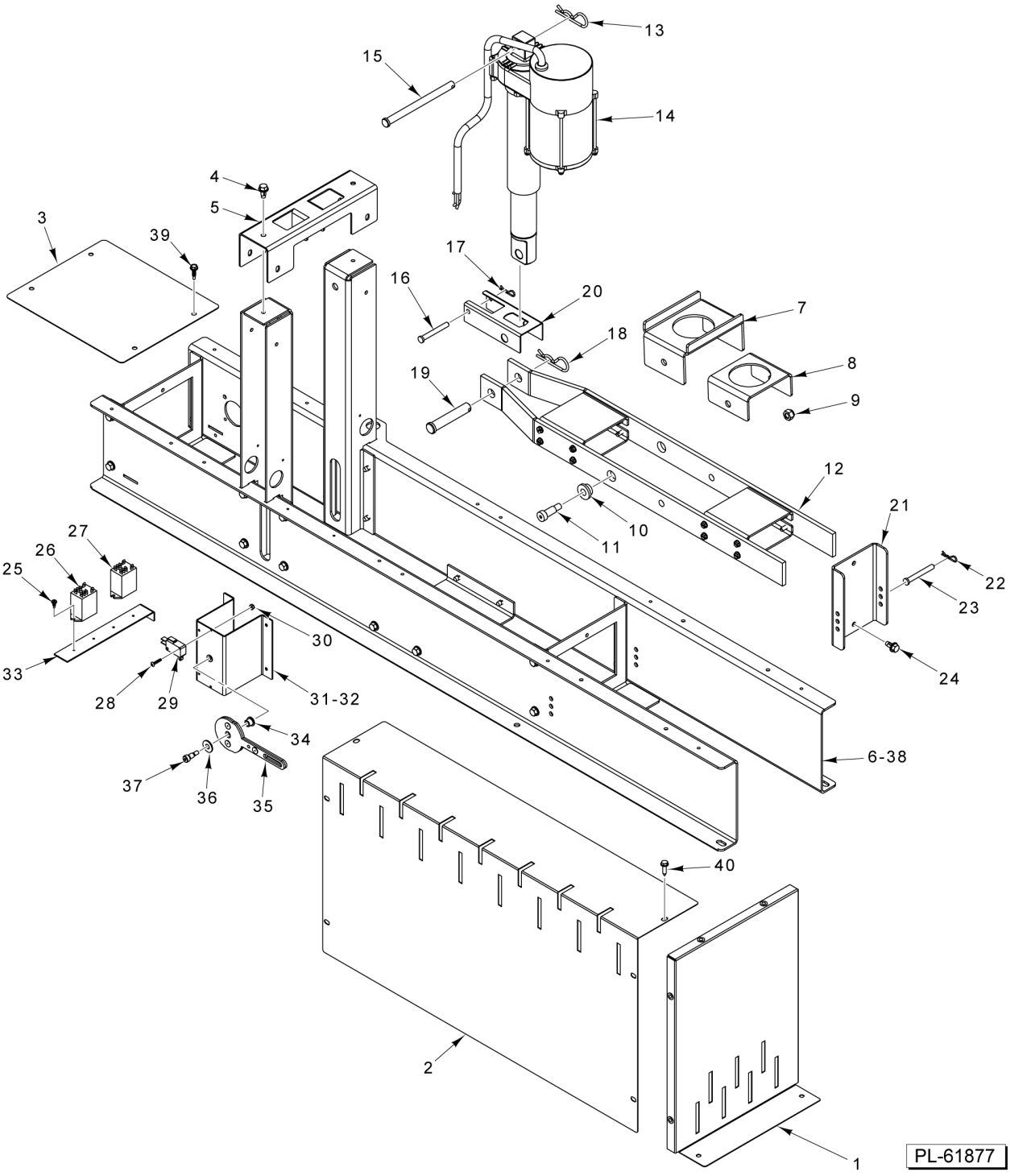
13
15
14
4
5
3
39
17
16
20
7
18
8
19
9
12
21
10
11
22
23
27
26
25
24
30
33
28
29
31-32
34
37
36
35
6-38
40
2
1
PL-61877

LIFTER

LIFTER

ILLUS. PL-61877	PART NO.	NAME OF PART	AMT.
1	01-1M6608-00001	Cover - Front/Back	2
2	01-1M6608-00002	Cover - Side	2
3	01-1M6608-00003	Cover - Front	1
4	01-1000V4-00436	Screw 1/4-20 x 1/2 Hex Hd	6
5	01-1M7544-00101	Bracket - Support	1
6	01-1M7544-00001	Body - Rack Lift Assy. (Incls. Items 4 & 5)	1
7	01-1M6601-00103	Support - Rotator	1
8	01-1M6601-00104	Support - Rotator	1
9	01-1000V4-00380	Nut 5/16-18 NYLOCK	2
10	01-1000V0-00121	Bearing	2
11	01-1000V4-00379	Bolt - Shoulder	2
12	01-1M6601-00001	Lifting Arm Assy. (Incls. Items 7 thru 11)	1
13	01-1000V1-0086A	Pin - Cotter	1
14	01-1M7699-00001	Kit - Actuator W/ Bracket (Incls. Item 20)	1
15	01-1000V1-00108	Pin 3/8 x 5 In	1
16	01-1000V1-00087	Pin - Clevis (1/4 x 2 In.)	1
17	01-1000V1-0087A	Pin	1
18	01-1000V1-0086A	Pin - Cotter	1
19	01-1000V1-00109	Pin - Clevis (1/2 x 2-3/4 In.)	1
20	01-1M7698-00001	Bracket - Lift Actuator	1
21	01-1M6600-00203	Bracket - Support	1
22	01-1000V1-0087A	Pin	2
23	01-1000V1-00087	Pin - Clevis (1/4 x 2 In.)	2
24	01-1000V4-00436	Screw 1/4-20 x 1/2 Hex Hd	2
25	01-1000V4-00510	Screw Mach. - Pan Head (6-20 x 0.375)	4
26	01-1000V6-00271	Relay - D.P.D.T. (1/2 Hp., 120 VAC)	1
27	01-1000V6-00297	Relay - DPDT 1/2 HP. (24V Coil)	1
28	01-1000V4-00461	Screw 4-40 x 5/8 (SST)	4
29	01-1000V6-00343	Switch - Lever SPST	2
30	01-1000V4-00355	Nut	4
31	01-1M6603-00001	Bracket Assy. - Switch	1
32	01-1M6630-00002	Harness - Rack Lift	1
33	01-1M6600-00104	Bracket - Relay	1
34	01-1000V0-00139	Bearing - Flanged Sleeve	1
35	01-1M7551-00102	Cam - Lift Switch	1
36	01-1000V4-00433	Washer 1/4 In. (SST)	1
37	01-1000V4-00572	Shoulder Screw, #10-32 X 3/8 Thread Length, .25 DIA X 3/8 Shoulder Length	1
38	01-1M7551-00001	Rack Lift Assy	1
39	01-1000V4-00426	Screw #10-16 x 3/4 Hex Hd. (Drill Tip) (SST)	AR
40	01-1000V4-00400	Cap Screw 10-32 x 3/4 Hex Hd. (SST)	AR

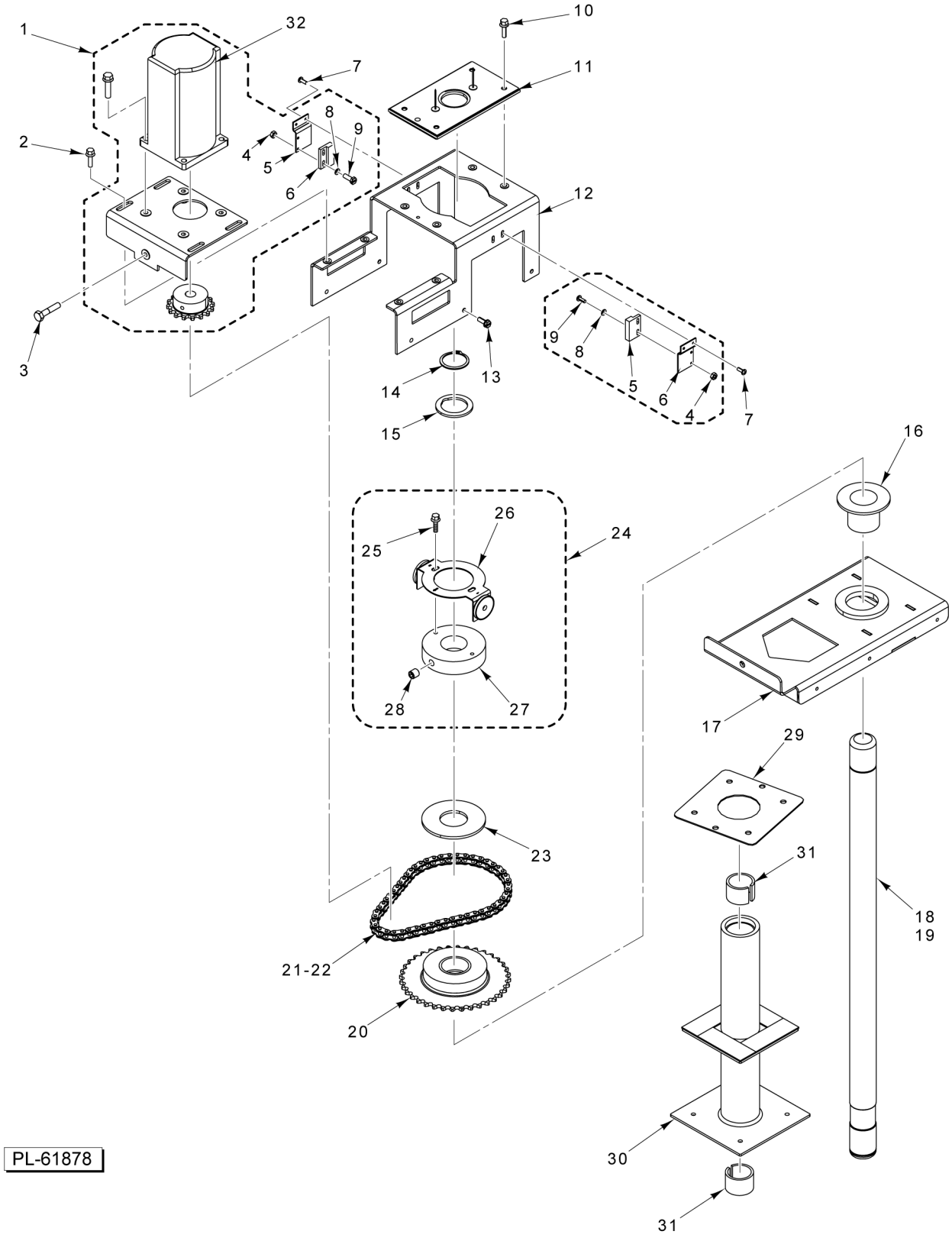
1
32
10
7
11
8
9
2
4
5
6
12
3
9
8
5
6
4
7
13
14
15
16
26
25
24
28
27
17
29
23
31
18
19
21-22
20
30
31
PL-61878

ROTATOR

ROTATOR

ILLUS. PL-61878	PART NO.	NAME OF PART	AMT.
1	01-1M7318-00001	Rotation Motor Assy. (Incls. Items 4 thru 6, 8, & 9)	1
2	01-1000V4-00284	Screw 10-32 x 3/4 Hex Washer Hd., Serrated Flange (SST)	4
3	01-1000V4-00564	Screw, Sheet Metal Hex Hd. W/ Washer 1/4-20 x 1 (SST)	1
4	01-1000V4-00586	Nut	4
5	01-1M6604-00106	Bracket - Rotate Switch	2
6	01-1M5777-00101	Switch (Magnetic)	2
7	01-1000V4-00515	Screw - Sheet Metal, Pan Hd. 6-32 x 3/8 (Zinc)	AR
8	01-1000V4-00585	Flat Washer	4
9	01-1000V4-00584	Screw	4
10	01-1000V4-00284	Screw 10-32 x 3/4 Hex Washer Hd., Serrated Flange (SST)	4
11	01-1M6606-00002	Shaft Alignment Assy	1
12	01-1M6604-00201	Bracket - Mounting	1
13	01-1000V4-00385	Screw - Sheet Metal, Hex Hd. 10-16 x 3/4 (SST)	4
14	01-1000V1-00085	Snap Ring	1
15	01-1M6704-00001	Shim - Carrier (Height Adjustment)	1
16	01-1000V0-00114	Bearing - Flange	1
17	01-1M6605-00001	Rotator - Lifter	1
18	01-1M6604-00105	Shaft - Rotator (B Style)	1
19	01-1M6604-00305	Shaft - Rotator (C Style)	1
20	01-1M6610-00001	Sprocket - Rotator	1
21	01-1000V3-0087A	Chain - Roller 20-1/8 In	1
22	01-1000V3-00088	Link - Connecting	AR
23	01-1M6604-00104	Clutch - Slide	1
24	01-1M6629-00004	Magnet Switch Assy. (Two Magnets) (B Style) (C Style) (Incls. Items 25 thru 28).	1
25	01-1000V4-00284	Screw 10-32 x 3/4 Hex Washer Hd., Serrated Flange (SST)	2
26	01-1M6880-00004	Pointer Assy. (Two Magnets) (B Style) (C Style)	1
27	01-1M6604-00103	Collar, Set - Rotator	1
28	01-1000V4-00161	Screw, Set - Allen (3/8-16)	1
29	01-1M6715-00001	Clamp - Rotator Housing	1
30	01-1M6662-00001	Housing - Shaft	1
31	01-1M7464-00001	Kit - Bearing (Shaft Housing)	1
32	01-1000V8-0177C	Capacitor, Motor Run - (4uF/250VAC)	1

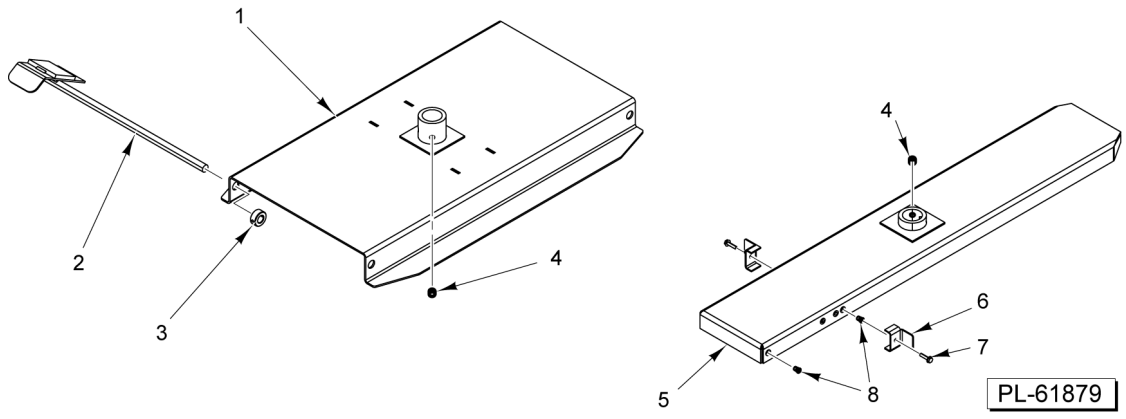

CARRIER

CARRIER

ILLUS. PL-61879	PART NO.	NAME OF PART	AMT.
1	01-1M7630-00001	Carrier (B Style) (Single Rack) (Incls. Items 2 thru 4) (15.60 in wide)	1
2	01-1M2580-00002	Stop - Rack Carrier (B Style Carrier)	2
3	01-1000V1-00013	Collar - Set 1/2 In. Dia	4
4	01-1000V4-00654	Screw - Set 3/8-24 x 3/8 (Knurled Tip) (Knurled Tip)	2
5	01-1M6770-00005	Carrier (C Style) (Single Rack) (Incls. Items 4, & 6 thru 8)	1
6	01-1M4862-00201	Stop - Rack Carrier (C Style Carrier)	2
7	01-1000V4-00284	Screw 10-32 x 3/4 Hex Washer Hd., Serrated Flange (SST)	2
8	01-1000V4-00121	Insert - Threaded 10-32 Hex	6

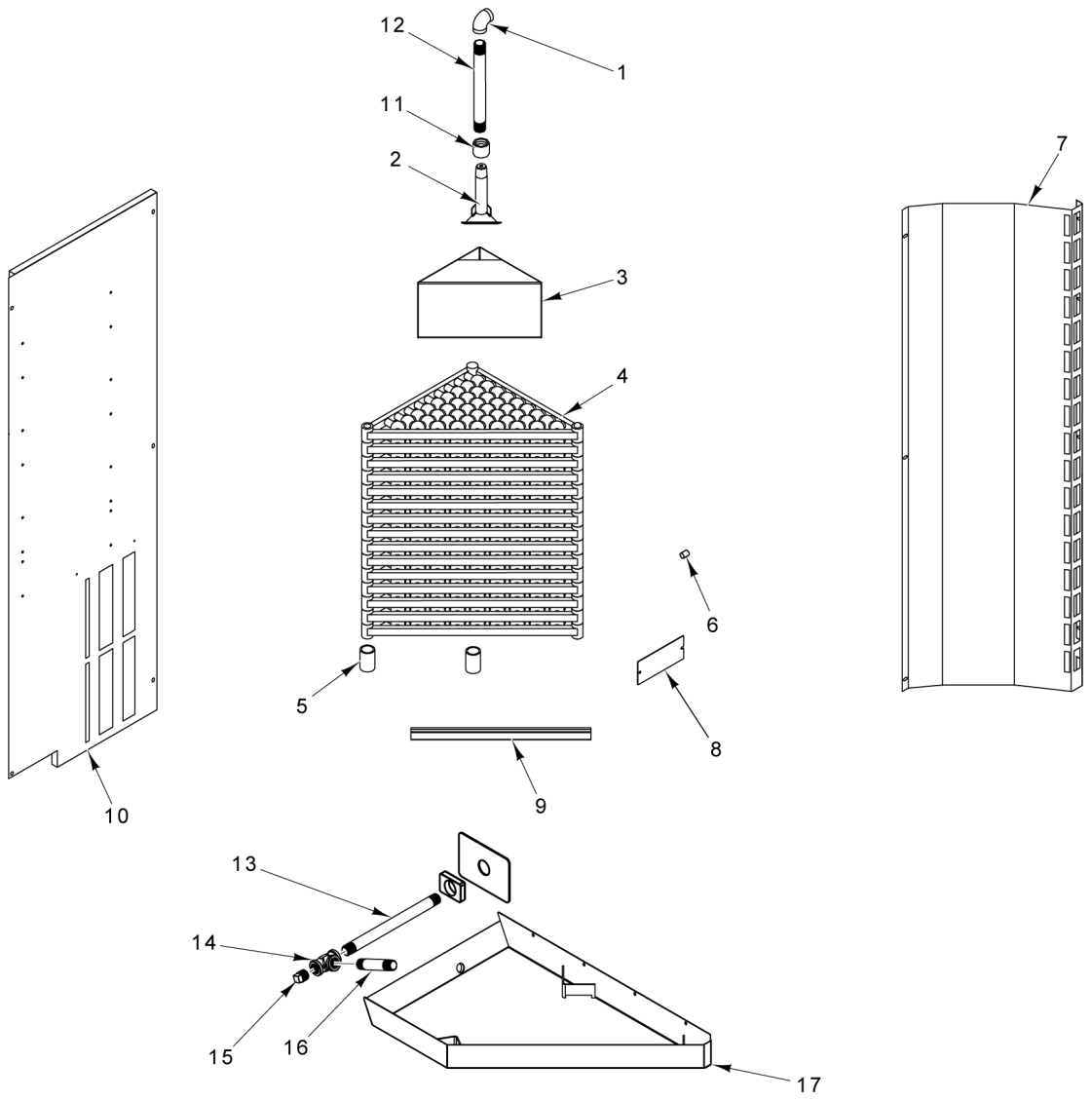

STEAMER ASSEMBLY

STEAMER ASSEMBLY

ILLUS. PL-61880	PART NO.	NAME OF PART	AMT.
1	01-100V17-00347	Elbow 1/2 In. x 90 Deg. (SST)	1
2	01-1M7100-00001	Sprayer - Steam Manifold	1
3	01-1M5198-00001	Box Weldment - Steamer	1
4	01-100V16-00529	Casting - Steamer	AR
5	01-1M5536-00001	Support - Steamer Castings	2
6	01-1M2161-00001	Screw - Leveler	1
7	01-1M5474-00001	Panel - Steamer	1
8	01-1M5446-00002	Plate - Steam Loader Bolt Cover	1
9	01-1M5065-00001	Bracket - Water Guide	AR
10	01-1M5471-00001	Panel - Steamer (Rear)	1
11	01-100V17-00183	Coupler 1/2 In. (SST)	1
12	01-100V17-00535	Pipe 1/2 x 14 In. (SST)	1
13	01-1M7672-00001	Kit - Front Drain	1
14	01-100V17-00860	Tee 1/2 NPT (SST)	1
15	01-100V17-00766	Plug - 1/2 NPT	1
16	01-100V17-00859	Pipe 1/2 NPT x 5 (SST)	1
17	01-1M7619-00001	Pan - Drain	1

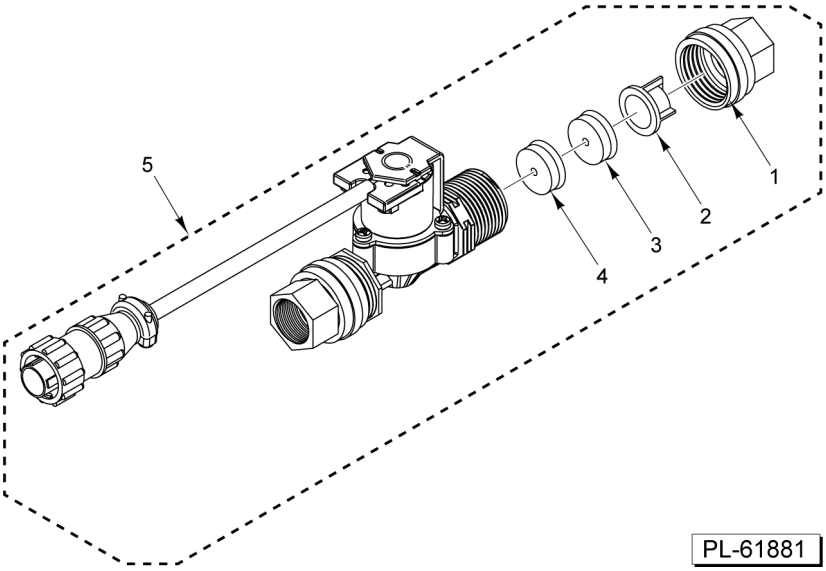

EXTERIOR WATER SUPPLY

EXTERIOR WATER SUPPLY

ILLUS. PL-61881	PART NO.	NAME OF PART	AMT.
1	01-100V17-00830	Adapter - Hose to Pipe 3/4 GHTF x 1/2 NPTF	1
*2	01-100V17-00838	Filter - Solenoid Valve (5 GPM Without Restrictor)	1
3	01-100V17-00840	Restrictor - Flow (White 3 GPM) (Double Rack Oven)	1
4	01-100V17-00839	Restrictor - Flow (Brown 2 GPM) (Single Rack Oven)	1
5	01-1M7494-00001	Kit - Water Solenoid (Incls. Items 1 thru 4)	AR

* No Restrictor used on Panera Bread Double Rack Ovens.

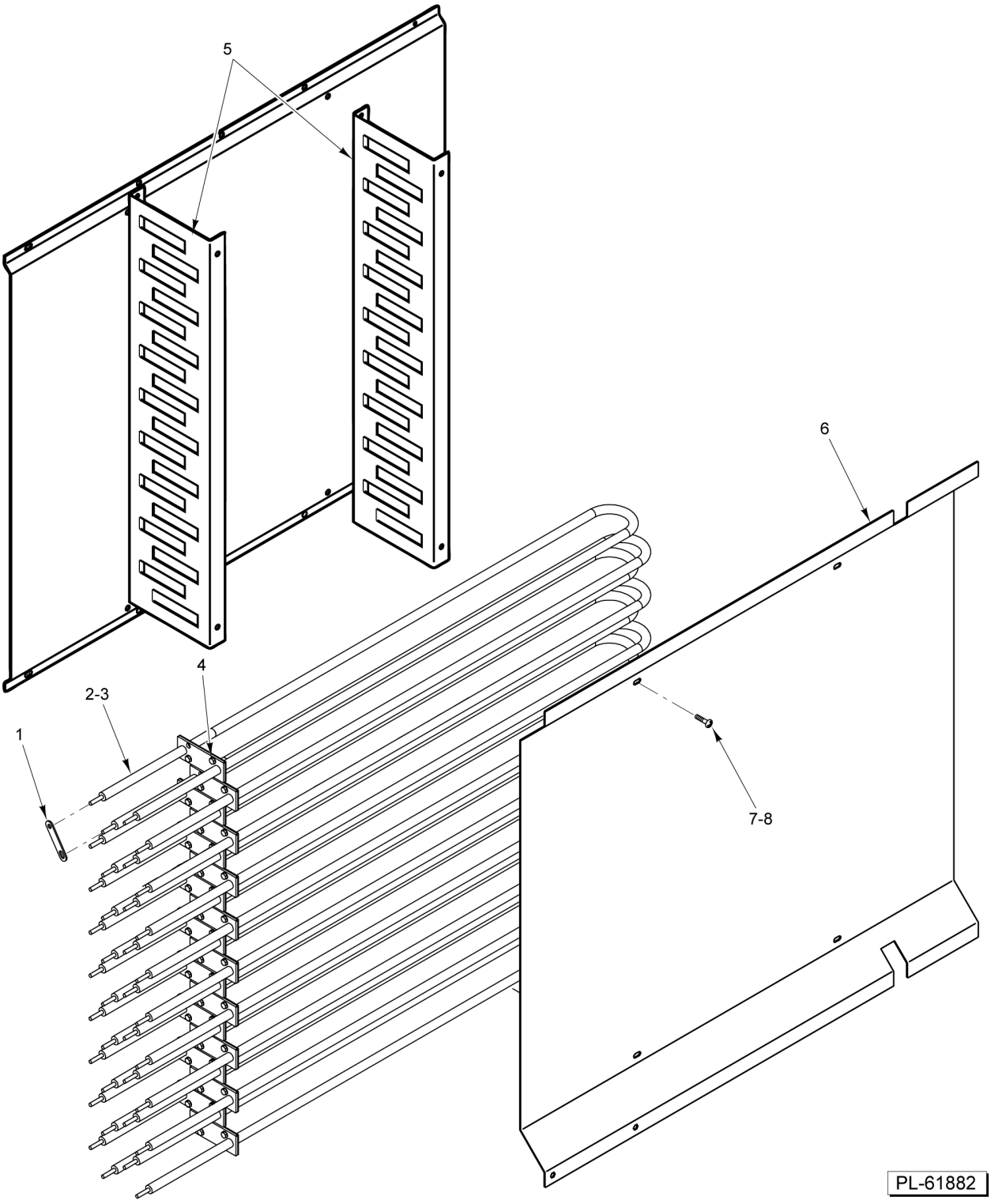

HEATING ELEMENTS

HEATING ELEMENTS

ILLUS. PL-61882	PART NO.	NAME OF PART	AMT.
1	01-1M5578-00001	Jumper - Heater	AR
2	01-100V10-0228A	Element - Heating (208 V., 2850 W.) (For Ovens W/ 208 V., 3 Ph.)	12
3	01-100V10-0228B	Element - Heating (240 V., 2850 W.) (For Ovens W/ 240-480 V., 3 Ph.)	12
4	01-1000V4-00426	Screw #10-16 x 3/4 Hex Hd. (Drill Tip) (SST)	24
5	01-1M5411-00001	Channel - Element Support	2
6	01-1M5407-00002	Baffle - Side (RH)	1
7	01-1000V4-00121	Insert - Threaded 10-32 Hex	8
8	01-1000V4-00400	Cap Screw 10-32 x 3/4 Hex Hd. (SST)	8